FIRST ANGLE PROJECTION (ALL DIMENSIONS IN MILLIMETRES)

DRAWING No. 2-80-320-16138

05-228/C

CAUTION THE INFORMATION ON THIS DOCUMENT IS THE PROPERTY OF BHARAT HEAVY ELECTRICALS LTD. IT MUST NOT BE USED DIRECTLY OR INDIRECTLY IN ANY WAY DETRIMENTAL TO THE INTEREST OF THE COMPANY.

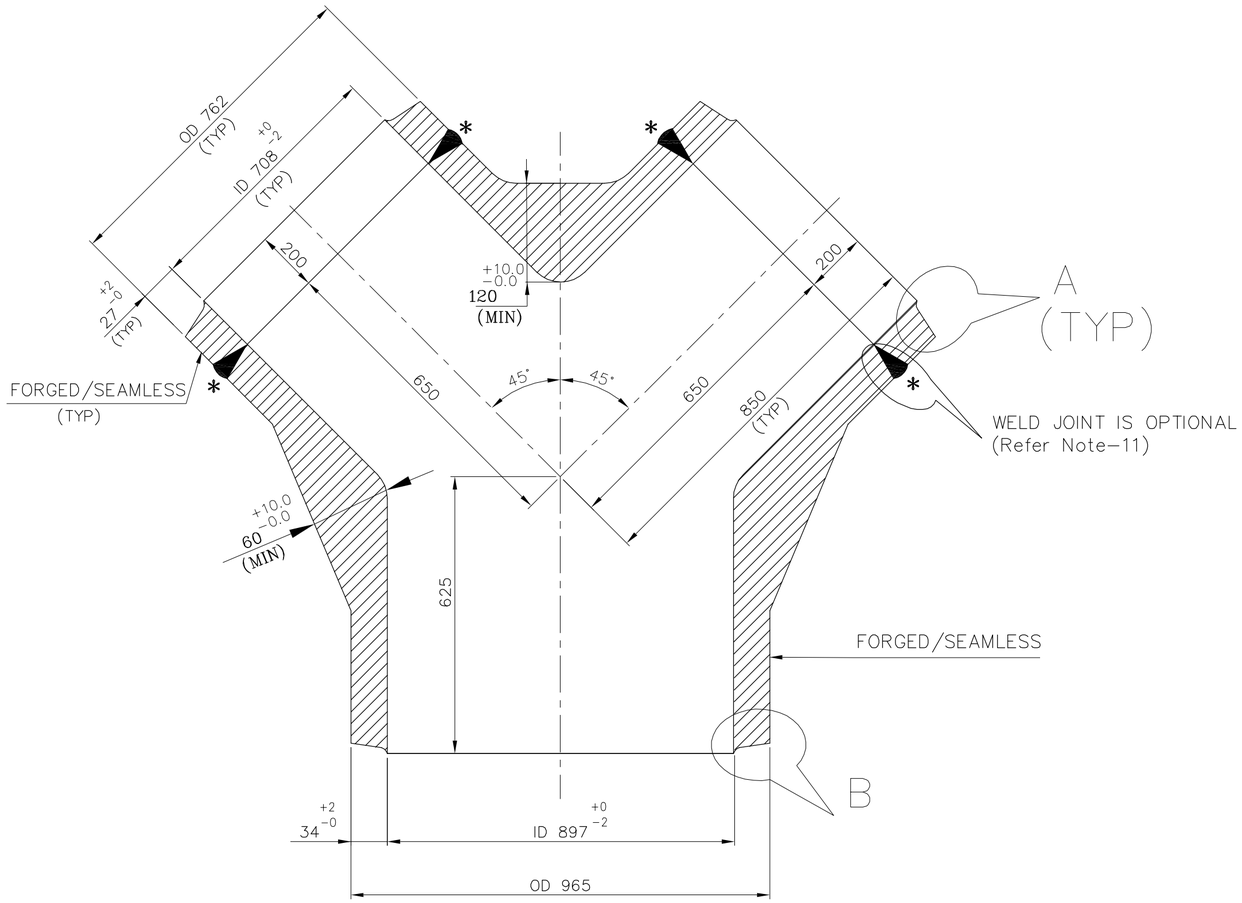

NOTES

1. DESIGN PRESSURE: 71.0 Kg/sq.cm (g)
2. DESIGN TEMPERATURE : 370 °C
3. FOLLOW TDC : AS APPLICABLE
4. MANUFACTURING, INSPECTION, TOLERANCES AND TESTING SHALL BE AS PER IBR & EN-13480-3
5. CONSTRUCTION SHALL BE SEAMLESS / FORGED.
6. MATERIAL SPECIFICATION SHALL BE SA105 .
7. CONNECTING PIPE SIZES OD965x34/OD762x27/OD762x27.
8. AVERAGE INSIDE DIAMETER ON FITTING BODY TO GUARANTEE FLOW AREA MIN 90% OF THE CIRCULATION AREA OF THE CONNECTING PIPE.
9. VENDOR SHALL SUBMIT THE DETAILED DRAWING OF Y-PIECE FOR BHEL APPROVAL BEFORE MANUFACTURING .
10. WEIGHT MENTIONED IN THE DRAWING IS INDICATIVE ONLY. ACTUAL WEIGHT TO BE FURNISHED BY FITTING SUPPLIER.
11. IF PUP-PIECE TO BE WELDED TO MAINTAIN THE OVER ALL DIMENSIONS , VENDOR SHALL SUBMIT WPS AND NDT DETAILS FOR BHEL APPROVAL.

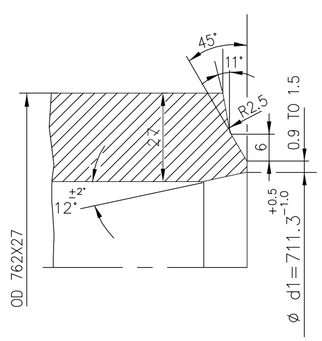

DETAIL-A

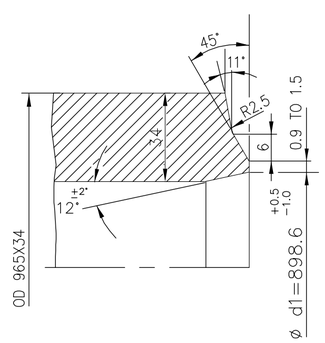

DETAIL-B

ITEM NO.	DESCRIPTION	DRAWING NO.				
	Y-PIECE OD965x34 / OD762X27	2-80-320-16138	ITEM NO.	MATERIAL CODE	A/C	UNIT WT.
			VAR NO.	MATERIAL SPEC.		QTY.
				–	A	1600 000
				SA 105		1

TYPE OF PRODUCT OR NAME OF CUSTOMER/PROJECT

BHARAT HEAVY ELECTRICALS LTD., PIPING CENTRE, CHENNAI 600 017

	NAME	SIGN	DATE	NO OF ITEMS
DRN	SUDARSSAN		22.05.19	
CHD	E.PYRIA/PAVAN		22.05.19	
APPD	SESHAGIRI		22.05.19	

REV	DATE	ALTD
01		APPD
ZONE		

DEPT.	GRADE OF UN TOL. DIM	SCALE	WEIGHT (Kg).	BHEL PO REF. NO.	ITEM No.
CODE	C/M/F	N.T.S.			

TITLE	CARD CODE	MSE DRAWING NO.	REV
Y-PIECE OD965x34/OD762x27 SA105	U 01	2-80-320-16138	00

SIZE A2